ITEM NO.	PART NUMBER	DESCRIPTION	QTY.
1	4150A-HM-01-NC50	BODY	1
2	4100-E-02	LOCK RING	1
3	4100-E-03	SPLIT RING	1
4	4100-E-04-M	UPPER SEAT	1
5	4100-E-05-M	LOWER SEAT	1
6	4100DS-M-06	STEM	1
7	4100DS-A-07	U-JOINT	1
8	4150DS-A-08	INSERT	1
9	4100-E-09	BALL	1
10	WHTA-362-INX	SPIRAL RETAINER RING	1
11	3495-10-08-4	WAVE SPRING	1
12	4150A-SK	SEAL KIT	1

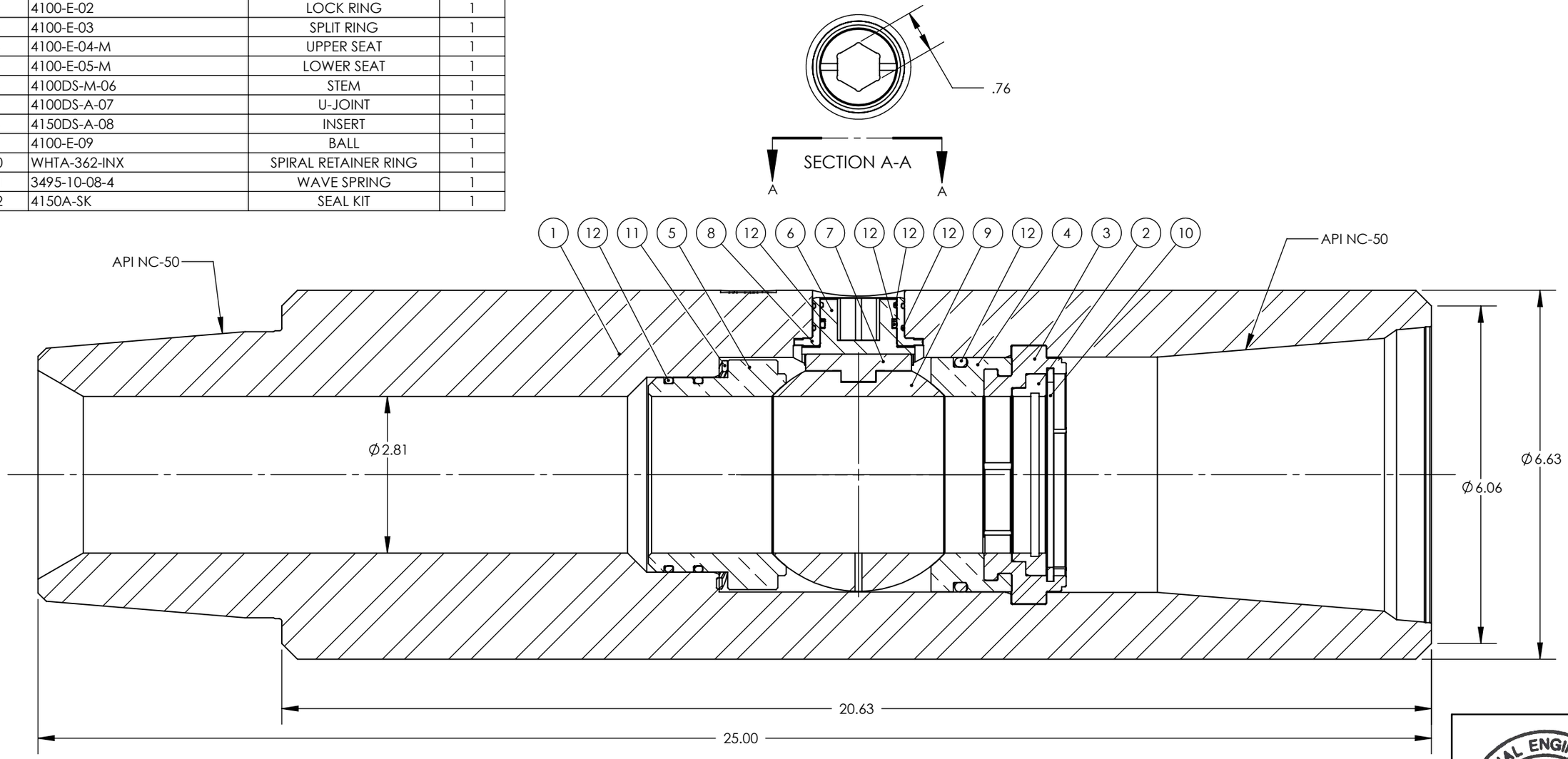

NO.	MM/DD/YY	BY	CHK'D	APPV'D	REVISION
1	05/08/17	ABE	ABE	PR	NEW RELEASE

ASSEMBLY NO:	4150A-NC50-SERIES
DESCRIPTION:	KELLYCOCK ASSEMBLY
WORKING PRESSURE:	10,000 PSI
MAJOR REPAIR KIT:	4150A-MRK
WEIGHT:	158 LBS
SHEET NO:	1/2
DRAWING NOT TO SCALE	ALL DIMENSIONS IN INCHES

HKE HI-KALIBRE EQUIPMENT
7321 - 68 AVENUE EDMONTON, AB T6B 3T6 CANADA
PHONE: (780) 435-1111 FAX: (780) 436-5164 EMAIL: hke@hikalibre.com

THIS DRAWING IS PROPERTY OF HI-KALIBRE EQUIPMENT LTD AND MUST BE RETURNED ON DEMAND. THIS PRINT IS LOANED IN CONFIDENCE WITH UNDERSTANDING THAT IT IS NOT TO BE REPRODUCED OR DISCLOSED, IN THE WHOLE OR IN PART, WITHOUT WRITTEN CONSENT FROM HI-KALIBRE EQUIPMENT LTD. HI-KALIBRE EQUIPMENT LTD RESERVES ALL RIGHTS OF DESIGN AND INVENTION.

PROFESSIONAL ENGINEER ALBERTA
PATRICK RABBY

MAY 12, 2017

APEGA PERMIT # P09570